Wiring diagram for the PV 444

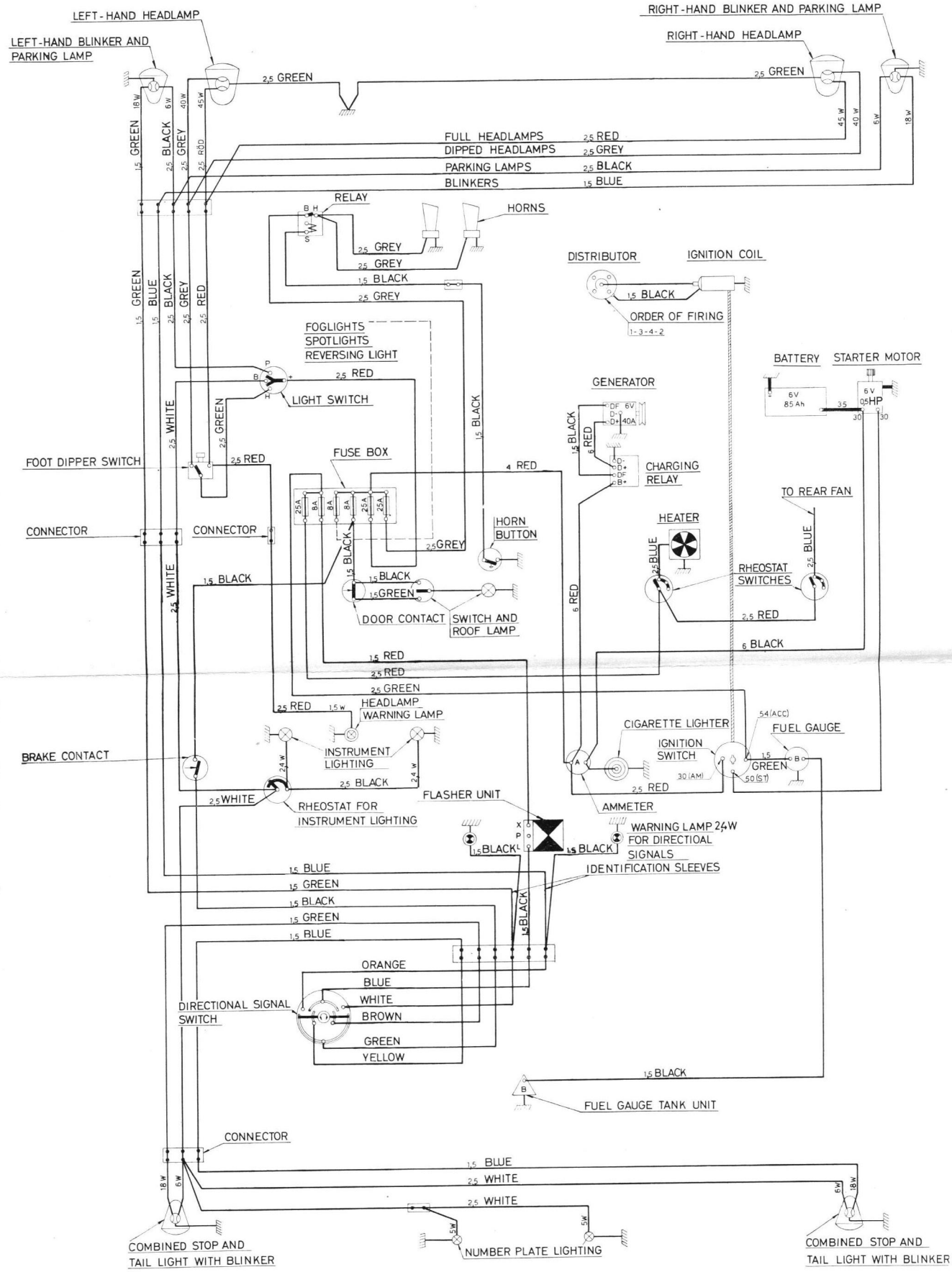

(figures refer to the cross section of the cables in sq.mm.)